Equipment list

CLUB251

PA system

Main	Console:	MIDAS SIENA 400
	Full range speaker:	RCF TT25 × 2(メイン),TT22 × 2(インフィル)
	Sub woofer:	RCF TTS28 × 2
	Full range amplifier:	LAB,GRUPPEN C68:4
	Sub woofer amplifier:	QSC PL236 × 2
	Processor:	RCF DX4008
	Graphic equalizer:	KLARK-TEKNIK DN360
Monitor	Speaker:	EV TX1152 FM × 5
		RCF HD 12-A × 2(SIDE)
	Amplifier:	QCS POWER LIGHT1.8 × 3
	Graphic equalizer:	YAMAHA Q2031A × 1
		YAMAHA Q2031B × 2
Effector		dbx 274
		BEHRINGER MDX 2100 × 3
		YAMAHA SPX 2000 × 2
		Roland SDE-3000
Microphone	Dynamic:	SHURE SM58LCE × 6
		SHURE SM57LCE × 4
		SHURE BETA58A × 5
		SHURE BETA57A
		SHURE BETA52
		SENNHEISER e604 × 3
	Condenser:	AKG C-391 × 3
	Direct box:	BOSS DI-1 × 1
		CONTRYMAN TYPE85 × 5
Microphone stand	210 × 9　259 × 11　200 × 1	
Audio hardware	CD deck:	DENON DCD-CX3
		TASCAM CD-RW900SL
		TASCAM CD-RW750
	DVD deck:	TASCAM DV-D01U
		TOSHIBA DBR-Z110
	Projector:	EPSON EMP-54/screen:100inch

Amplifier etc	Guitar AMP:	Roland JC-120J
		Fender Twin Reverb BLK panel re issue
	(Head):	Marshall 1959 100w re issue 4input
	(Speaker):	Marshall 1960 BX
		Marshall 2000 TSL-100(☆)
	Bass AMP(Head):	GALLIEN-KRUEGER 800RB
	(Speaker):	AMPEG SVT 810E
	Drums:	YAMAHA YD-9000
		BD/22",TT/8",10",12",13",16",SNARE/14"
	Cymbals:	Zildjan
		Clash/ROCK CLASH:16",18"
		Ride/ROCK RIDE:21"
		Hi-hat/New Beat Hihats:14"
	Keyboard:	M-AUDIO Pro Key 88(☆)
DJ	DJ Mixer:	PIONEER DJM-700(☆)
	Turntable:	Technics SL-1200MK3 × 2
	CDJ:	PIONEER CDJ-1000 MK3 × 2(☆)

'14.8現在／予告なく変更する場合があります。(☆)印はオプションです。

PA system block

CLUB251

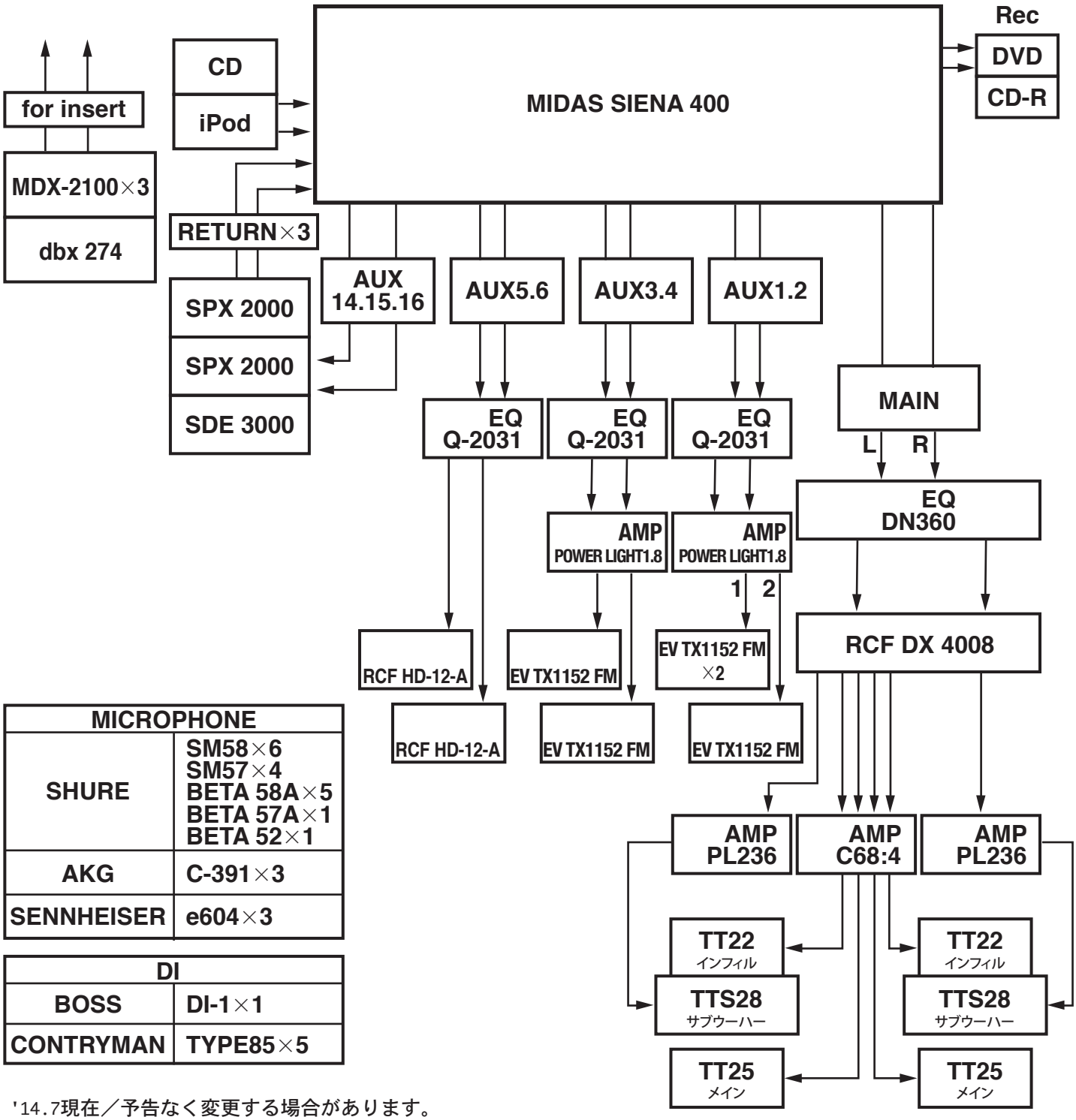

MICROPHONE	
SHURE	SM58×6 SM57×4 BETA 58A×5 BETA 57A×1 BETA 52×1
AKG	C-391×3
SENNHEISER	e604×3

DI	
BOSS	DI-1×1
CONTRYMAN	TYPE85×5
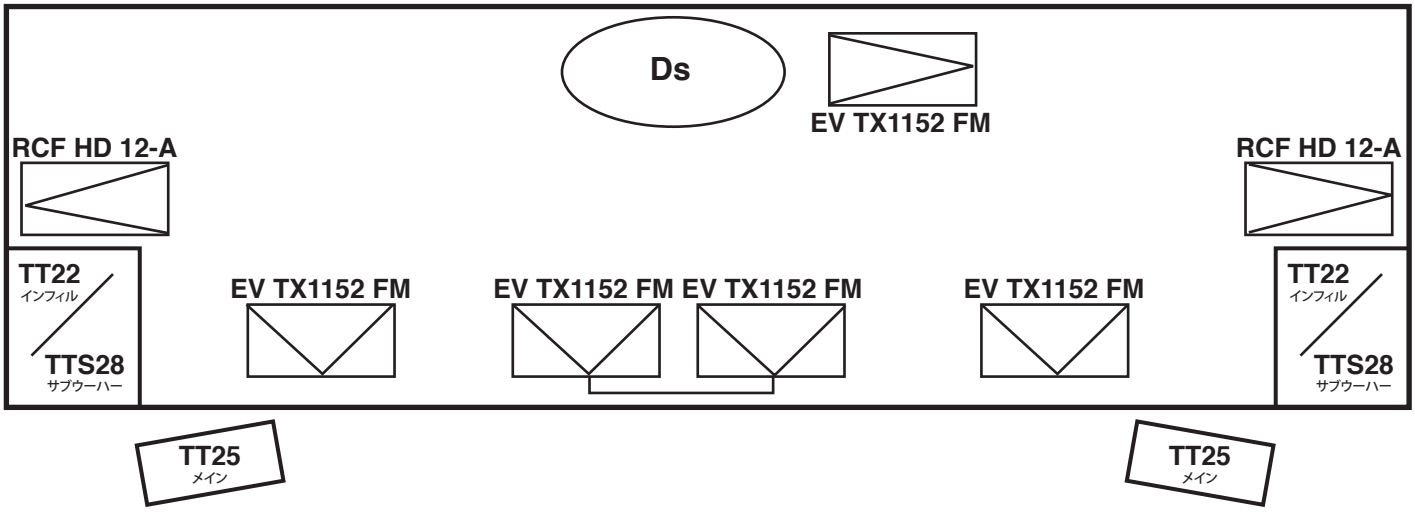
'14.7現在／予告なく変更する場合があります。